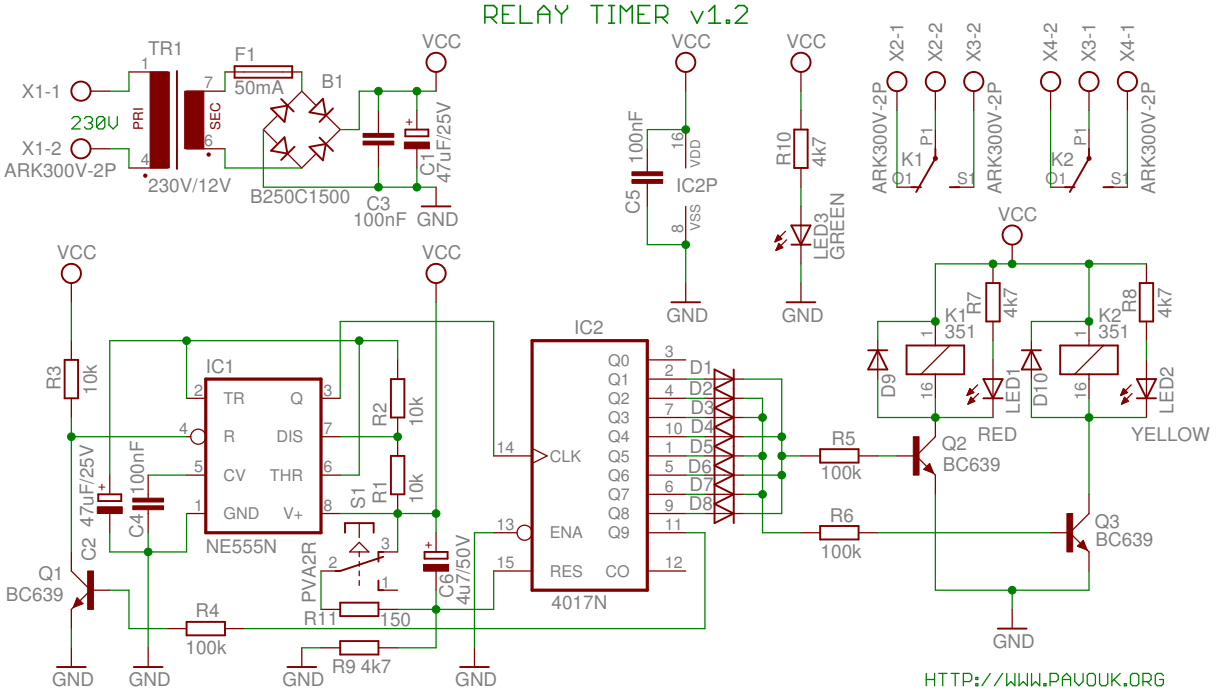RELAY TIMER v1.2